EVERTOUGH

67010

Pulley Puller/Installer Kit

Used to remove and install power steering pump pulleys on most domestic vehicles.

INSTRUCTIONS:
ALWAYS WEAR SAFETY GLASSES AND GLOVES.

Pulling

1. Lubricate forcing screw threads **(E)** or **(I)**.
2. Assemble into puller housing.
3. Align puller clam shell to fit pulley size.
4. Attach to pump pulley.
5. Slide retaining ring on until the clam halves are completely caged.
6. Using 5/8" or 16 mm and 13/16" or 21 mm turn pressure screw **(E)** in until pulley is removed from shaft.

Installing Pulley on Shaft

1. Match threads of installation bolt **(B)** or **(H)** to the threaded center of the mainshaft and lubricate threads.
2. Using pressure bearing **(A)** assemble and attach to main shaft with pulley in place.
3. Hold installation bolt with 14 mm or 9/16" wrench and turn pressure bearing with 21 mm or 13/16" wrench until pulley is pressed all the way on.

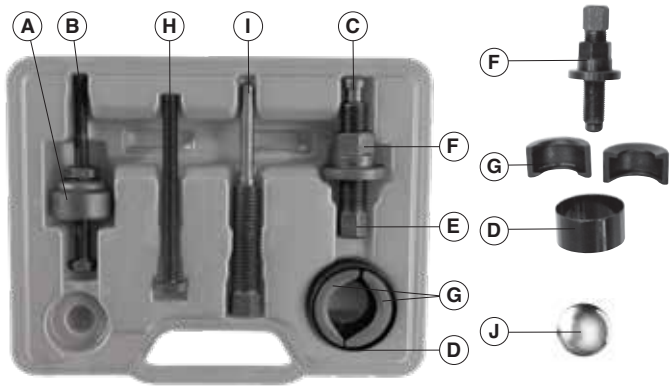

A. Pressure Bearing
B. 3/8" x 16 Bolt
C. Pressure Tip
D. Collar Retaining Ring
E. Pressure Screw
F. Pressure Flange
G. Collar Halves
H. 3/8" x 16 / 8 mm x 1.25 Bolt
I. Pressure Screw Extended
J. Ball Bearing

All instructions and illustrations are general and are NOT INTENDED TO BE VEHICLE SPECIFIC.
EverTough recommends that you read the repair manual designated for the vehicle specific to the application by the manufacturer before using this tool.

Mineola, NY 11501 I Made in Taiwan
Customer Service: 1-877-TUFF123